2024年臺灣國際科學展覽會
優勝作品專輯

作品編號　200015

參展科別　環境工程

作品名稱　ReCiPla - Cyclic Soil Microplastic Remover

得獎獎項　四等獎

就讀學校　Colégio Dante Alighieri
指導教師　Wayner de Souza Klen
　　Katia Grossmann Sastre
作者姓名　Joao Miguel Grossmann Sastre

關鍵詞　Microplastics、Soil treatment、Electrostatic separation、Van de Graaff generator

作者照片



Abstract

GROSSMANN, João Miguel Sastre. **ReCiPla - Cyclic Soil Microplastic Remover**: A way to remove microplastics from soil using electrostatics. 2023. 28 p. Research report – Scientific Apprentice Program, Colégio Dante Alighieri, São Paulo, 2023.

Microplastics are the largest form of physical pollution on the planet. Affecting everything from terrestrial and aquatic environments to the air, compounds up to 1 micrometer in size are present inside the human body and can intoxicate the main organs in which they are found, such as the lungs, spleen, liver, and heart. Therefore, methods of removing these compounds from nature are essential, which is why this research is based on electrostatically removing MP from the soil. To this end, a vibrating conveyor belt was designed that would act in conjunction with a plate electrified by a Van de Graaff generator to separate the plastic compound using electric field induction. After characterization tests to quantify the voltage produced by the generator, which produced an average of 95 kV, the vibrating belt was made and will be used later in conjunction with the electrostatic method. This methodology suggests that it's a success even after the electrified plate was applied to its structure. It carried out the proposed processes, such as moving the test masses, vibrating them, and fully supporting the electrified plate. In addition, the electrostatic removal method was tested to verify its efficiency and applicability. It was found that the removal of microplastics ranged it from 10 to 20% efficiency, suggesting it to be an effective method for separating microplastics. It should be noted that these statistics will be improved as the research progresses. In this way, the research proved capable of establishing an electrostatic removal method, as well as a process for transporting the material to be removed, thus achieving the objectives it set out to achieve. Finally, it should be noted that this research is still under development, with a view to applying the process in conjunction with the conveyor belt to carry out sample tests, as well as improving the removal process in the future to make it more efficient.

Keywords: Microplastics, Soil treatment, Electrostatic separation, Van de Graaff generator.

1 Introduction

1.1 Microplastic

The definition of the term "microplastic" (MP) is something extremely debated by modern science, while some define it as particles smaller than 5mm, other researchers claim that this size is too large to be considered "micro". However, the most complete definition to date is that "microplastics are any solid synthetic or polymeric matrix particles, regular or irregular in shape and ranging in size from 1 µm to 5 mm, of any primary or secondary manufacture, which are insoluble in water" (FRIAS; NASH, 2019). These particles spread very easily throughout the environment, due to their light mass and physical-chemical properties, but they are formed in two different ways. The first is the indirect process of forming MPs, which involves the degradation of larger plastic debris through natural factors, including chemical, physical, and biological processes (MACHADO *et al.*, 2018). The second mechanism for producing microplastics is to form them intentionally for use in industries, such as cosmetic abrasives, virgin *pellets* products, and filaments for 3D printers (MACHADO *et al.*, 2018).

Microplastics in soil

While microplastics have been widely studied in the aquatic environment, in the terrestrial environment this form of pollution has recently been studied and is a hot topic within the scientific community. Microplastics move easily within terrestrial habitats, whether by abiotic means of dispersal such as rainfall, wind, and the movement of land masses, or by biotic means such as anthropological actions and animal interactions (GUO *et al.*, 2020). In addition, microplastics can also move in different ways within the soil, whether horizontally or vertically; such forms of movement vary, not only due to the properties of the microplastic (size, density, weight), but also mainly due to the properties of the soil itself. Finally, microplastics also act as pollution vectors, helping to increase diseases and microorganisms, which are attached to these compounds, forming what (AMARAL-ZETTLER; ZETTLER; MINCER, 2020) called a *plastisphere*, which consists of the presence of colonies of microorganisms that settle on human waste and live there.

Another issue to be raised is the agricultural impacts caused by the presence of microplastics in the soil, which can lead to damage to the production of certain crops. For example, the presence of microplastics in soil culture media can decrease the growth rate of plants, and the rate of reproduction, alter the physiological characteristics of individuals, and generate instabilities

with regard to the microbial communities that are located within the organism, thus destabilizing plant metabolism (TIAN *et al.*, 2022).

1.1.1 Impacts of microplastics

Due to their extremely small size, microplastics are able to enter the interior of the human body, including the bloodstream (YANG *et al.*, 2022), and at certain concentrations, they can cause variations inside mitochondria, as well as causing oxidative stress for the cells tested (ZHANG *et al.*, 2022). Thus, we can see that microplastics have already made their certain appearances inside the human body and, although their effects are still being studied, everything indicates that they are not beneficial to human health. However, microplastics are increasingly present in our daily lives, since they are already present in the food chain, for example, the large amount of microplastics in oysters and mollusks is of great concern, when we analyze human consumption (CVERENKÁROVÁ *et al.*, 2021).

Plastic-derived compounds are able to alter the physical and chemical characteristics of the soil. Corroborating this, MPs also end up causing damage to plants, among which they affect key chemical reactions that occur for the functioning of a plant organism, whether this damage comes from inhibiting, altering, or damaging some biochemical process (ZHOU *et al.*, 2021).

2 Theoretical background

Among the most diverse fields of physics, electrical physics is possibly one of the most present in our daily lives, being the basis for the entire electrical energy system discovered by Benjamin Franklin and its applications in everyday life. Among the concepts present in this branch of science, the most important is to define the object to be studied, which, for this research, is the interaction between different types of plastic and some electrical properties listed below.

2.1 Electric fields

The electric field is an area in which charges receive a force on them, usually from the interaction with other electric charges (ROCHE, 2016; RENNIE, 2019). Since its discovery, this area of electrostatics has been the subject of study by scientists, serving not only as a study in itself but also as a means of achieving possible results using electrical energy. The areas where the electric force acts are formed by the isolation of a charge and the change in magnetic fields (RENNIE, 2019).

Some of the properties that electric fields have are related to their intensity, the distance they act, and the force caused by the charge. Among them, Charles de Coulomb stipulated as early as the 19th century that the force that two charges generate on each other is proportional to the product of the absolute value of the charges and inversely proportional to the square of the distance between them (RENNIE, 2019). This phenomenon was called Coulomb's Law and the equation representing the law was arrived at, which states that the electrical constant, which varies depending on the permittivity of the medium, multiplied by the absolute value of the charges of the two particles and divided by the radial distance between them, is equal to the electrical force produced in the interaction, i.e.,

$$F_e = K\frac{|Q_1||Q_2|}{d_r^2} \ , \tag{1}$$

where F_e is the electric force, K is the electrostatic constant in vacuum ($9 \cdot 10^9 N/C^{-2}m^{-2}$), $|Q_1|$ and $|Q_2|$ are the moduli of the point electric charges and d is the radial distance between the two electric charges.

In addition, electric fields are also closely related to electrification processes, which charge non-electrified materials and compounds, either by temporarily polarizing or transferring electric charges (MERKULOVA; CHERUNOVA; DANILENKO, 2017). Among these processes, the one of greatest interest to this research is electrostatic induction, which consists of stimulating the

polarization of the position of electrons within a body from a previously electrified particle, generating a positive and negative pole electrically in the body undergoing the interaction.

2.2 Triboelectric effect

The triboelectric effect is closely related to the field of electrostatics, where the behavior produced by charges at rest is studied, as is the electric field they produce. However, this effect is the result of friction between any two objects, which can generate electrostatic energy (RENNIE, 2019).

Among the applications of the triboelectric effect, the formation of a series that synthesizes the charge acquired by different materials when they undergo this phenomenon has been one of the greatest applications of scientific studies (RENNIE, 2019). It can be seen that the triboelectric series is the basic material for studies that use the effect in question for scientific applications, such as electrostatic separation, for example.

It can be seen that, among the compounds studied by the triboelectric series, plastic polymers are among the major studies carried out. We can cite the work of (LUNGU, 2004) who demonstrated that it is possible to separate different types of plastic using the triboelectric effect.

2.3 Korona-Walzen-Scheider system

In response to the growing demand for studies into the impacts caused by microplastics, there has been a search for ways to remove them, such as the Korona-Walzen-Scheider (KWS) system, which consists of a method for electrostatically separating non-conductive materials (FELSING *et al.*, 2018). With this process, it is possible to separate different plastic polymers based on their electrostatic properties, thus aiming to remove these compounds from the soil and also to separate them from each other. The process in question consists of applying high voltage to a rotating metal drum which ends up creating a surface with high electrostatic properties, as seen in figure 1, inducing an attraction on the part of the fractionated compounds, separating them by the intensity of affinity that each one has in relation to the drum (FELSING *et al.*, 2018).

Figure 1 – KWS separation system.

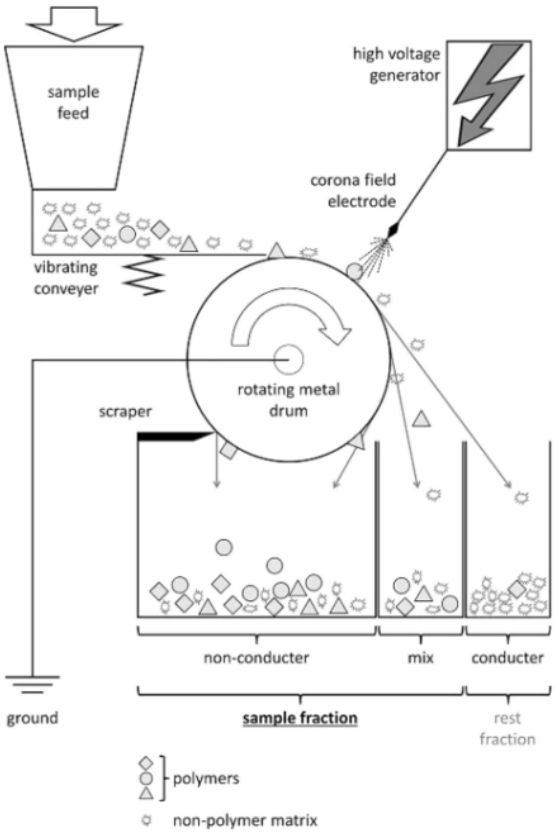

Source – Extracted from (FELSING *et al.*, 2018).

In 2019, (FELSING *et al.*, 2018) documented the process for the first time by applying it to the removal of microplastics and was able to identify an important advantage of using KWS compared to other separation methods: this method was very efficient at keeping soil properties - such as the proportion of minerals - intact. On the other hand, the same project identified design flaws that made it impossible to fully automate the process, as well as significantly reducing its efficiency on soil particles with grain diameters <100µm. The *design* flaw in question concerns the process of scraping the plastic chips attached to the rotating drum, which, in the experiment carried out, ended up being attached to both the drum and the scraper, generating the need for manual removal and even the possibility of clogging the mechanism.

In addition, with the same process mentioned in this topic, it was possible to observe that the system in question was more efficient with larger plastic particles, losing much of its efficiency when dealing with plastic particles of sizes <0.5 mm (ENDERS; TAGG; LABRENZ, 2020). In other words, even if the process is efficient, when dealing with more delicate sizes of micro/nanoplastics, a closer look is needed at how these are removed, since the area in which the electrostatic energy acts on the smallest MPs is extremely relevant when it comes to the electrostatic affinity that the system can generate (ENDERS; TAGG; LABRENZ, 2020).

Finally, some parameters are important to highlight for the success of the KWS system, including the need to produce a voltage of up to 35 kV and the need to reduce the scale significantly for laboratory application, since the original process processed several tons of soil per hour (FELSING *et al.*, 2018).

2.4 Van de Graaff generator

The Van de Graaff Generator is an electrostatic energy-producing machine capable of generating extremely high electrical voltages (FURFARI, 2005). Since its conception in 1929 by physicist Robert Van de Graaff, this electrostatic energy producer has been widely used for demonstrations and applications where high voltage production was required since such a generator can produce $> 10^6 V$(FURFARI, 2005). Furthermore, in subsequent decades, Van de Graaff generators have been used extensively in nuclear and particle physics research, given the properties mentioned above.

This generator manages to produce such a high charge using the process of frictional electrification (MARTINS; PINTO, 2009). Electrification by friction consists of scraping materials that have a difference in charge and thus manage to electrify themselves through this friction (MARTINS; PINTO, 2009). It is worth noting that, in order to increase the efficiency of this process, the greater the distance between the materials within the triboelectric series, the greater the difference in charges they have, making the electrification even more powerful. The way in which the generator carries out these processes is shown in figure 2.

Figure 2 – Scheme of a Van de Graaff generator.

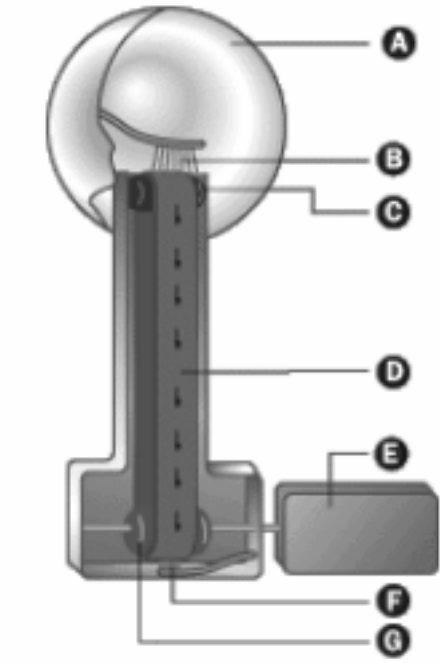

Source – Extracted from Martins e Pinto (2009).

The way the Van de Graaff works consists of a rubberized belt (identified by the letter D) running over a pulley (identified by the letter G) which rotates the mechanism with a motor (identified by the letter E). As the rubber material rubs against the pulley G, a negative charge predominates on the pulley, which induces the belt to become positively charged. The rubber then scratches a set of wires (usually copper and identified by the letter B), which end up electrifying the metal sphere (identified by the letter A) (MARTINS; PINTO, 2009).

In addition, the shape of the metal sphere allows the charges to be distributed evenly at their final destination, causing the charge to accumulate until an electrical discharge occurs between the generator and a body that can receive this discharge (MARTINS; PINTO, 2009).

3 Engineering problem

Microplastics are increasingly present all over the planet and, as already mentioned, there is no doubt that this compound affects all the environments in which it is found, causing changes that may or may not lead to the deterioration of this or its properties. In view of the growing population that the human race is experiencing today, the need for food is essential in society, and ways of boosting production are studied in various branches of modern science, such as agronomy, for example. However, as much as ways of making production more efficient are being studied and applied in the field, there is still a barrier that separates man from full productive efficiency, nature, which still acts as a productive obstacle, leading producers to invest in more intensive forms of production (based mainly on technological advances) and extensive forms (based on the use of a larger productive area) to meet the needs of the population. Thus, the study of areas of potentialization of the productive environment is of the utmost importance, that is, the maximum use of the available space, trying to mitigate the variables that the environment already has, such as microplastics.

It is therefore the responsibility of this project to identify, catalog, and remove the most common type of microplastic in soil used for agricultural purposes, polyethylene terephthalate. It is also the aim of this research to look for more efficient ways of using soil, trying, a priori, to apply the prototype solution to plowed land before planting a new crop. The author is also interested in extending the research to other types of plastic.

4 Proposed solution

The literature shows some successful processes for separating MP from soil samples contaminated with MP, such as the Korona-Walzen-Scheider (KWS) process (FELSING *et al.*, 2018). In this sense, we propose an alternative solution to the engineering problem by building a prototype, based on the principle of electrification by electrostatic induction, for the separation of MPs from soil. Although similar to the Corona effect electrification process, the use of a Van de Graaff voltage generator, together with the induction of a uniform electric field, is decisive for the development of a new and more applicable process on a large scale.

The solution aims to achieve a prototype that is functional and performs the electrostatic removal process satisfactorily.

Subsequently, a phase will be implemented after electrostatic separation in order to remove the finest particles by means of density removal (densimetry). This will be done by formulating a solution with specific characteristics (such as density) and applying it to a centrifuge to be built.

4.1 Variable to be studied

In this project, some variables will be studied in order to quantitatively verify the efficiency of the process of separating MP from soil.

As categorical variables, we will study the type of soil to be analyzed and the constituent material of the MPs that contaminate the soil, totaling two categorical variables.

As quantitative variables, we have the masses of contaminated soil, masses of treated soil, and masses of MP removed from the soil. These masses will be used to infer the efficiency of the separation process. In addition, in order to verify the Van de Graaff generator's ability to generate potential differences (DDP), we will use air humidity, ambient temperature, and local atmospheric pressure to estimate the DDP generated by the Van de Graaff in question.

5 Methodology

In order to separate MP from soil, a prototype will be developed for this purpose. Therefore, we will initially carry out a bibliographical survey in order to verify the main strategies that are currently applied for separating MP from soil. Once the strategy to be applied has been chosen, a simple experiment will be carried out to verify the effectiveness of the chosen strategy. After this stage, a prototype will be designed. To do this, schematics and diagrams will be drawn up in the SketchUp computer environment and then the prototype will be assembled on a reduced scale to verify its applicability. Once this experiment has been carried out, data will be collected and processed so that we can, from the data, verify whether the proposed solution was able to solve the engineering problem raised.

5.1 Methodology to estimate the voltage generated by the Van de Graaff

The literature presents some technological advances based on Paschen's law that can be used to determine the DDP generated by a Van de Graaff, such as those presented in Babich e Tat'yana (2016), Boyle e Kisliuk (1955), Townsend e Bailey (1921), Meek (1940). This work will use the theoretical framework presented by Husain e Nema (1982) due to its simplicity. Paschen's law states that the DDP required to create a voltaic arc in a gas is given by (HUSAIN; NEMA, 1982),

$$V_B = \frac{Bpq}{\ln(Apd) + \ln\left[\ln\left(1 + \frac{1}{\gamma_{se}}\right)\right]} \ , \tag{2}$$

where p is the local pressure, d is the distance traveled by the arc, γ_{se} is the secondary electric emission coefficient, A is the saturation ionization of the gas in a particular regime of E/p (electric field per pressure), B is a constant related to the excitation and ionization energy of the gas. Defining the new variable $\eta = pq$ and deriving Eq.(2) with respect to η and evaluating the minimum, we arrive at,

$$\eta = \frac{e \ln\left(1 + \gamma_{se}^{-1}\right)}{A} \ . \tag{3}$$

Defining the constant,

$$k = \ln\left[\ln\left(1 + \frac{1}{\gamma_{se}}\right)\right] \ , \tag{4}$$

Paschen's law assumes the form,

$$V_B = \frac{B\eta}{\ln(A\eta) + k} \ , \tag{5}$$

and we can use the data available on Husain e Nema (1982) to calculate η which gives us the following data,

Table 1 – Constant values A and B for the air.

A (IOnization$/kPa \cdot cm$)	B $(V/kPa \cdot cm)$
112,5	2737,5

Source – Extracted from: (HUSAIN; NEMA, 1982).

Table 2 – Constant values k for the range of η.

η $(kPa \cdot cm)$	k
0,0133 – 0,2	$2,0583\eta^{-0,1724}$
0,2 – 100	$3,5134\eta^{0,0599}$
100 – 1400	4,6295

Source – Extracted from: (HUSAIN; NEMA, 1982).

The methodology presented provides an estimate with a calculated error of approximately 3% according to the authors and can be used with relative safety for values of $\eta \leq 1400$ kPa $\cdot$ cm. For an atmospheric pressure of 1 atm (10^5 Pa) this gives us arcs of,

$$10^5 kPa \cdot d = 1400\text{kPa} \cdot \text{cm} \ , \tag{6}$$

$$d = 14cm \ . \tag{7}$$

Therefore, using Eq.(5) we can make a good approximation for the dielectric breakdown voltage of air for arcs of up to 14 cm at a pressure of 1 atm.

In this context, when carrying out the experiment we will control the temperature, pressure, and humidity variables in the room where the Van de Graaff sparks will be generated. To do this, we will use a system based on Arduino Uno and the BMP180 pressure and temperature sensor. The sensor's control logic can be found in Fig.(3).

The data obtained via the Arduino serial will be saved in a csv document using the PuTTY software and then uploaded to Google Sheets where statistical quantities will be calculated. For this stage of the project, the average pressures $\bar{p}$ will be calculated using the following expression,

$$\bar{p} = \sum_{i=1}^{n} \frac{p_i}{n} \ , \tag{8}$$

and the standard deviation of the sample of pressures measured by the BMP180,

$$\sigma = \sqrt{\frac{1}{n} \sum_{i=1}^{n} (p_i - \bar{p})^2} \ . \tag{9}$$

The outliers will be investigated by using the standard treatment, based on the interquartile range. After evaluating the quartiles threshold $Q1$, $Q2$, and $Q3$, we evaluated the interquartile range through the equation,

$$IQR = Q3 - Q1 \ , \tag{10}$$

and, then, we finally consider outliers any data value smaller than the bottom cut off C_b or greater than the top cut off C_t,

$$C_t = Q_3 + \frac{3}{2}IQR\ , \quad \text{or} \quad C_b = Q1 - \frac{3}{2}IQR\ . \tag{11}$$

At the end of this process, the average pressure value $\bar{p}$ will be used in Eq.(5) to calculate the dielectric breakdown voltage.

The size of the arc produced will be inferred by analyzing images from a video recorded during the experiment. Tracker software will be used for this. When the arc is generated, there will be a reference scale in the visual field of the video, in the same plane as the spark generation. With the help of this scale, a frame-by-frame analysis will be carried out in Tracker, which will give us a measure of the length of the arc produced d. With these two values, Eq.(5) will give us the dielectric breakdown voltage of the air.

Figure 3 – BMP180 sensor control script with Arduino.

```
1 #include <Wire.h>
2 #include <Adafruit_BMP085.h>
3 Adafruit_BMP085 bmp;
4 void setup(){
5   Serial.begin(9600); // Begins the communication
6   Serial.print("Temperature␣(*C)␣"); // Prints the first column
       header
7   Serial.print("\t"); // Separates the columns
8   Serial.println("Pressure␣(Pa)␣"); // Prints the second column
       header
9 }
10 void loop(){
11     Serial.print(bmp.readTemperature()); // Prints the temperature in
           the first column
12     Serial.print("\t"); // Separates the columns
13     Serial.print(bmp.readPressure()); // Prints the pressure in the
          second column
14     delay(2000); // Waits two seconds
15 }
```

Source – Elaborated by the author.

5.2 Methodology for developing the prototype

To design the prototype, initial diagrams will be made in the SketchUp software. These diagrams will be used to dimension the parts involved in transporting soil and electrical charges in the prototype. Once this stage has been completed, a scaled-down model will be designed.

Parts of this model will be built in 6mm thick MDF and other parts will be 3D printed in PLA material.

As the main mechanism for separating the MPs from the soil, we adopted electrostatic induction, so we chose the Van de Graaff generator as the electrostatic generator. This choice was based on two pillars: the ability to generate high electrical voltages and the safety related to the low electrical current produced when closing an electrical circuit. The prototype consists of a pulsating belt, made of insulating material, which will conduct the soil contaminated with MP along a region of intense electric field. This electric field will be generated by the arrangement of two long parallel plates, one connected to the Van de Graaff generator and the other grounded, placed close together.

Figure 4 – Proposal for assembling a prototype for separating microplastics from soil.

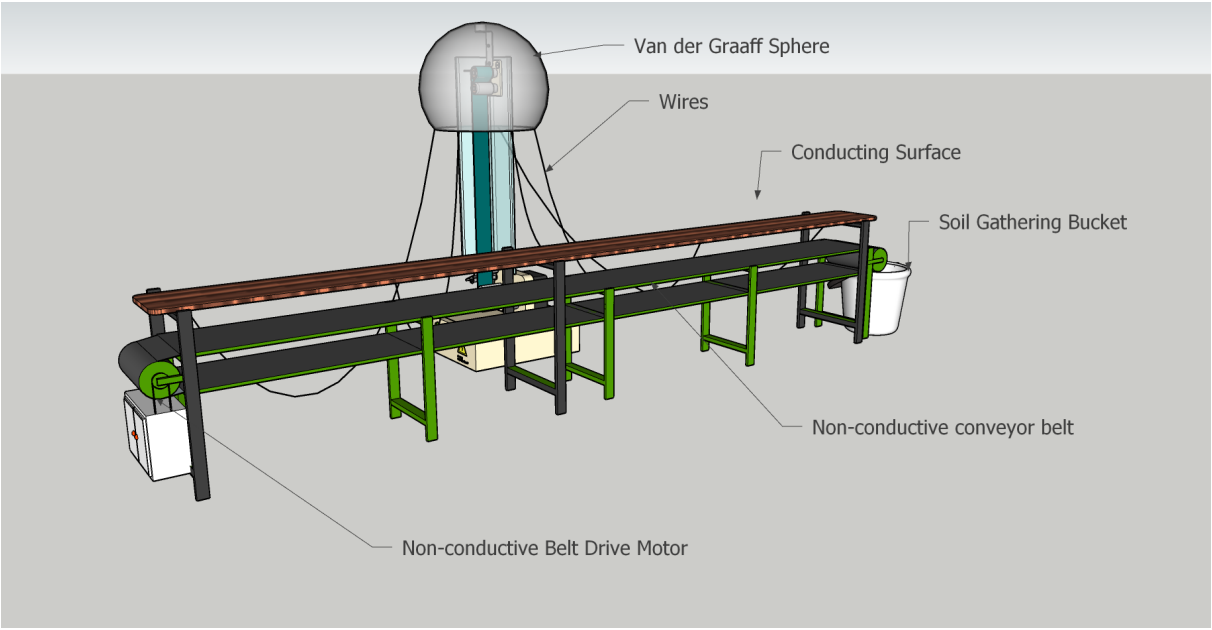

Source – Elaborated by the author using SketchUp.

The plate connected to the Van de Graaff will be electrified by contact, generating an intense electric field between the parallel plates. This electric field will induce electric charges in the MPs present in the soil, which in turn will undergo an electrostatic force that will lead them, with the help of the pulses from the mat, to the upper plate. The soil, in turn, being a better electrical conductor than the MP, will follow its path along the belt until it is dispensed into the soil collection bucket, already separated from the MP, Fig. 4.

The treadmill will be controlled by an Arduino UNO, connected to a 3V DC motor, which will drive the treadmill. We will use the Arduino's PWM outputs to control the motor's rotation speed and, therefore, the time the contaminated soil is subjected to the electric field. The electric charges generated by the Van de Graaff will be directed via wires to the conductive plate that

Figure 5 – Diagram of the motor connections to the Arduino.

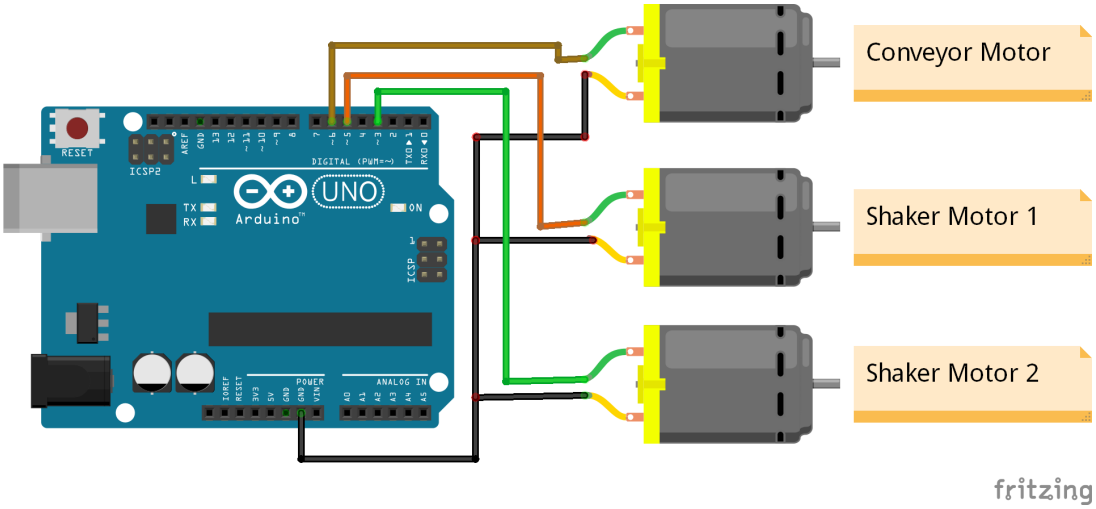

Source – Elaborated by the author using Fritzing.

will be positioned above the conveyor belt. The treadmill's pulsating vibrations will be generated by secondary motors, controlled by the same Arduino. The initial prototype design can be seen in Fig. 4. The motor connection diagram is shown in Fig. 5 and the control script for the treadmill motors can be found in Fig.6.

Figure 6 – Prototype motor control script.

```
#define conveyorMotor 3 // Defines some constants
#define shakerMotor1 5
#define shakerMotor2 6
#define conveyorSpeed 100
#define shakerSpeed 200
void (setup){
    pinMode(conveyorMotor, OUTPUT); // Sets the op. mode
    pinMode(shakerMotor1, OUTPUT);
    pinMode(shakerMotor2, OUTPUT);
}
void (loop){
    analogWrite(conveyorMotor, conveyorSpeed); // Turn on the motors
    analogWrite(shakerMotor1, shakerSpeed);
    analogWrite(shakerMotor2, shakerSpeed);
}
```

Source – Elaborated by the author.

5.3 Methodology for electrostatic separation experiment

5.3.1 Method verification

First of all, it is of the utmost importance to verify the functionality of the removal process, especially since it is completely new to the scientific community.

With this in mind, the verification experiment used a support shown in the , where you can see an opening for the vibrating mechanism to act on the sample, preventing the substrate from being compacted. In addition, the supports were designed to try and reduce their distance from the electrified plate as much as possible, in order to further intensify the electric field generated.

Figure 7 – Support used to realize the verification process.

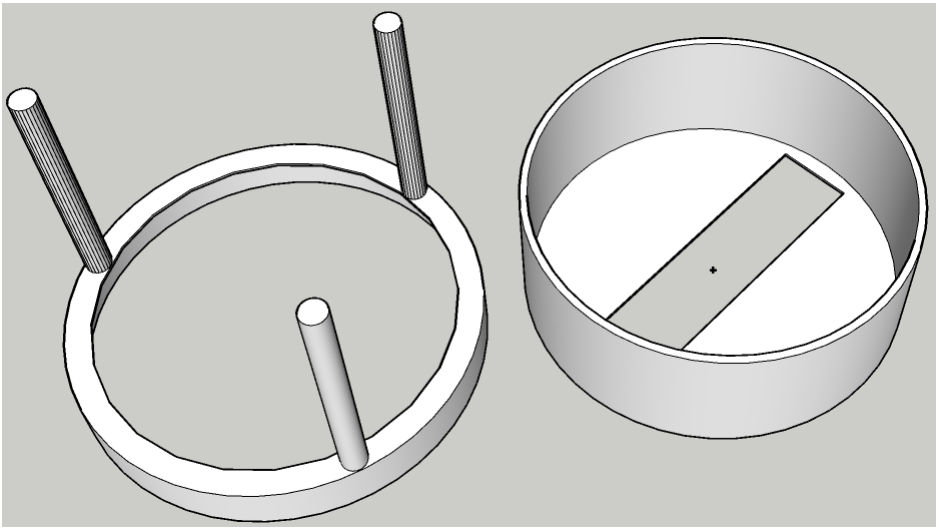

Source – Created by the author using SketchUp.

The process in question will be based on using this support to position a sample that will have 1 g of soil to 0.5 g of microplastic. Once the measurements have been taken, the process will begin to assess the removal of the microplastics. This process will last around 20 seconds per sample. At the end, a sheet of paper will be placed between the plate and the sample, the Van de Graaff will be switched off and the mass of microplastic removed will be quantified to check the efficiency of the process.

5.3.2 Application of the method in the prototype

The previously made prototype will be used for the laboratory tests. It will be given the same atmospheric characteristics (with the exception of atmospheric pressure, something that

cannot be controlled with the materials present) that were used to characterize the generator, again using the BMP180 sensor to maintain a measurement standard.

To start the experiment, it will be necessary to validate the previously mentioned characteristics, reaching conditions that enable the experiment to be carried out. After this check, the experiment will continue with the Van de Graaff generator already connected to the plate to be electrified. After this, the mixture of soil and microplastics (in a 2:1 ratio respectively) will be introduced into the belt designed for the process to begin.

This experiment will be carried out 50 times. To do this, 50 identical samples will be produced to avoid variations in experimental losses and other possible disagreements. All these samples will be made up using a high-precision Shimadzu ATX224 balance to carry out the mass measurements.

5.4 Methodology for analyzing the separation of microplastics

5.4.1 Statistics

The analysis of the separation of microplastics begins before the experiment is carried out by measuring the quantities of soil and MP used.

After the experiment, the mixture tested will be remeasured to assess the mass of microplastics removed from the substrate in question. The mass lost during the experiment will also be taken into account for statistical validation purposes (measured from the difference between the initial mass and the final mass, and after this calculation, the difference between the value obtained and the mass of microplastics removed).

With all these values submitted to statistical analysis, the percentage of removal of MP from the soil will be calculated and compared to processes such as Felsing *et al.* (2018) to validate the effectiveness of the process carried out. It should be noted that all processes will be carried out for all 100 samples collected. We will calculate the standard deviation, variance, and average of the values obtained in order to be able to ascertain the comparison in a more absolute way.

5.4.2 Physical evaluation

In addition to the statistical analysis to which the results will be subjected, it is also important to carry out an analysis of the characteristics of the microplastics removed, in order to assess the size of the polymer and its chemical composition, so as to be able to define the specificity of the removal carried out.

To confirm the chemical compound, a spectroscopic analysis will be carried out using the micro Raman method. This method consists of inflicting a beam of light with a single frequency on a material. This process is based on the photon-matter interaction, which causes the photons to be dispersed in different ways for each chemical chain (HASHMI, 2016), thus being able not only to identify the chemical material of these compounds but also the particle size resulting from this analysis.

With this in mind, a micro Haman spectroscope will be used to carry out the process of measuring and chemically evaluating the microplastics that will be used in the process.

6 Partial Results

This section presents the main results of this research. These results refer to the prototype design, characterizations of the Van de Graaff and data collected from the experiments carried out.

6.1 Characterization of soil and microplastics

All the samples were submitted for analysis using micro-Raman spectroscopy, but the results have not yet been presented by the laboratory. These results will be included later in the research plan.

6.2 Van de Graaff characterization

The first step was to measure the distance of the electrical discharge from the generator. To do this, support was set up to hold a cell phone in slow motion, which captured the exact moment of the electrical discharge. The Tracker software was then used to measure the size of each voltaic arc during the discharge.

After this process, all the measurements were corrected using the proportionality and similarity ratios between the distances from the camera to the generator and to the measuring instrument used, which was fixed to a flat wall at all times.

Our statistical analysis yielded the following quartile threshold,

$$Q_1 = 77,65kV \ , \quad Q_2 = 95,26kV \ , \quad Q_3 = 190,56kV \ . \tag{12}$$

Therefore, the cut off values C_b and C_t read,

$$C_b = -91,7kV \ , \quad C_t = 359,9kV \ . \tag{13}$$

The Van de Graaff used was characterized following the proposed methodology, in order to verify the maximum voltage that this equipment could generate. After a battery of 51 measurements, it was possible to affirm that the equipment used in this research was capable of generating a maximum voltage of 253.39 kV, with an average generating capacity of 95.26 kV. Figure 8 shows the values for all the tests carried out in this quantification.

Figure 8 – Graphic for the characterization of the Van de Graaff Generator.

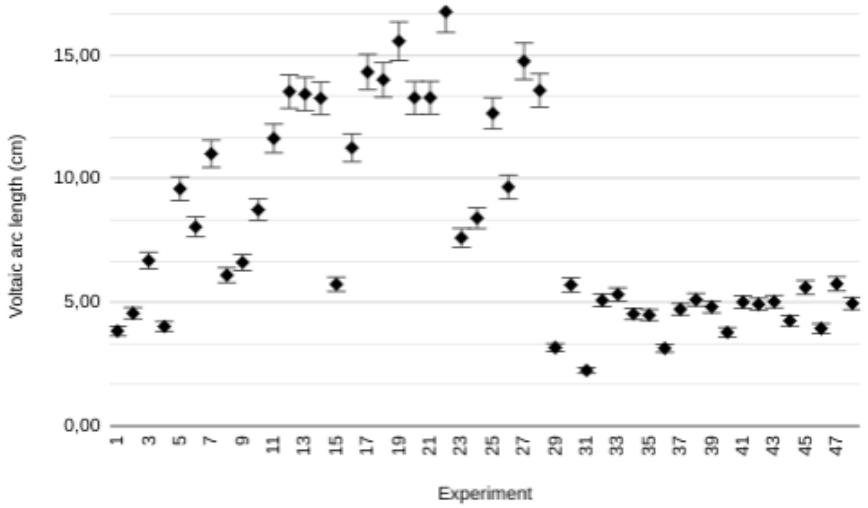

Source – Prepared by the author.

6.3 Concept test

The method on which this research was based led to the development of a prototype using a Van de Graaff generator to electrify a conductive plate that would attract the microplastic particles to the conductive plate, separating them from the soil.

To check whether this process would be viable and effective, the Van de Graaff generator characterized above was used to electrify a plate covered in aluminum foil, which would be placed under a container with samples containing 1g of ground to 0.5g of microplastic. These samples were subjected to the electric field generated while they were agitated by motors that gently tapped the bottom of the container in order to decompress the soil with MP. To perform this task, we built the prototype displayed in figure 9.

Following these processes, two samples were analyzed with this treatment. Each one sample was subjected to four complete cycles with approximately 30 seconds long. Results are summarized in the table 3.

Table 3 – Table with the results of sample 1.

	Plastic (g)	Mixed ground (g)	Removed plastic (%)	Wasted (%)
Sample 1	0.056	0.671	11	51
Sample 2	0.099	0.749	31	44

Source – Prepared by the author.

Figure 9 – Prototype for concept verification

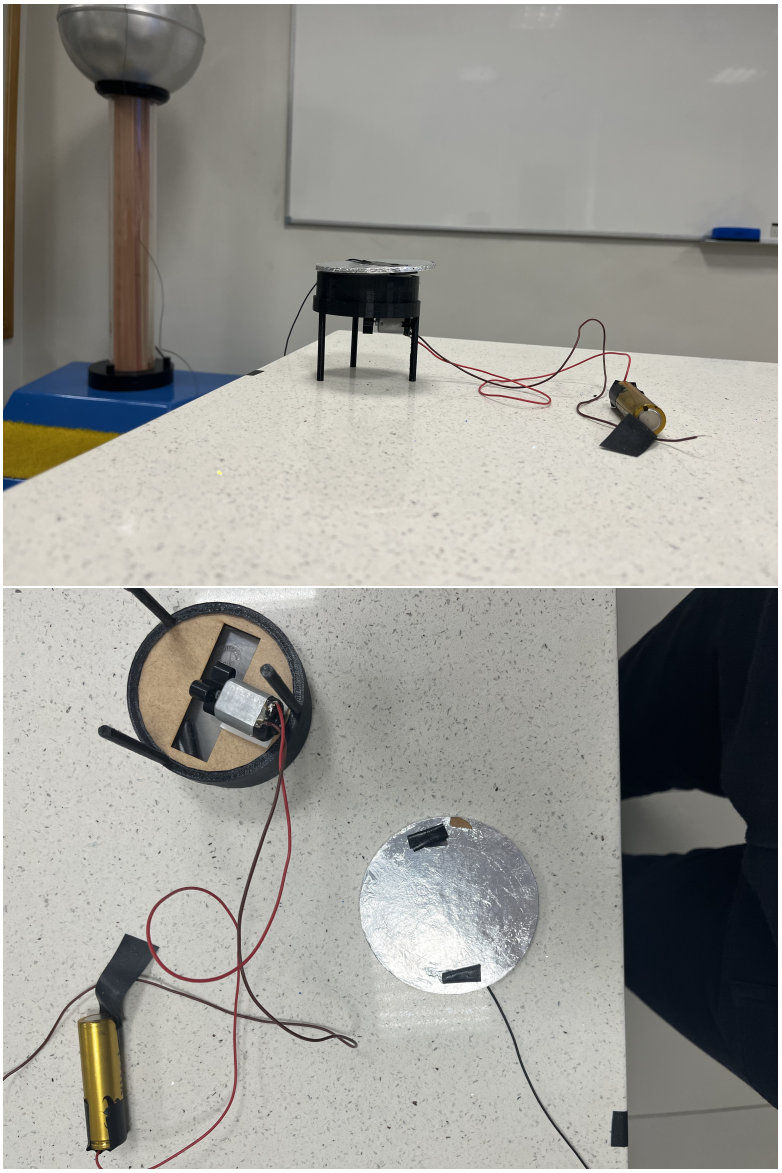

Source – Personal Archive.

6.4 Developed prototype

The prototype developed in question used sheets of medium-density wood (MDF) with thicknesses of 3 mm to make the belt, as well as Arduino motors to carry out the rotation and vibration processes, plus acrylic sheets of the same thickness, covered with aluminum foil, for electrification.

Firstly, the parts were laser-cut to the stipulated settings so that the prototype could be made. In addition, the motors were prepared and programmed to be inserted into the structure of the treadmill, which was to be made from fabric. After this, the rotation motors were synchronized and programmed, in addition to the central rotors that were used to perform a partial vertical

lifting process of the belt, with the aim of better distributing the material that is passing through the belt.

After several mechanical and electrical tests were carried out on the conveyor belt, it was able to verify that it was fully functional and efficient. However, in order to apply the aforementioned procedural concept, it will be necessary to make fine adjustments to guarantee the viability and efficiency of the mechanism, as well as ensure that the sample is not lost during the course of the experiment.

Figure 10 – First version of the prototype.

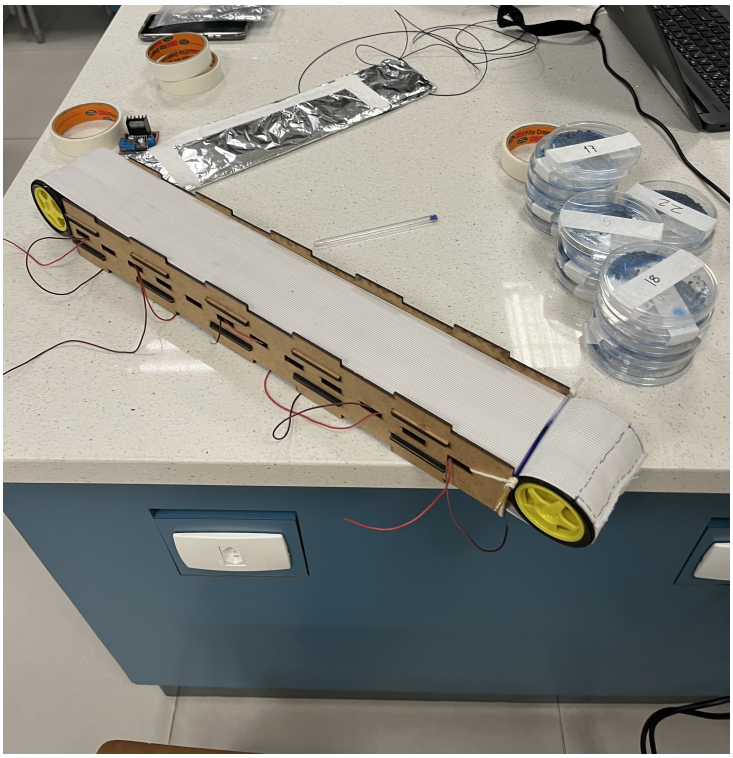

Source – Personal Archive.

7 Discussion of Results

The results of the mechanical design and construction of the conveyor belt were a success. It was possible to verify the functioning of the rolling process, as well as the vibratory processes that will prevent soil compaction. It was also possible to verify that the plate electrified with Van de Graaff worked perfectly when inserted into the conveyor belt. However, in order to carry out the experiment using this mechanism, it is still necessary to make fine adjustments to guarantee the veracity of the quantified data, so that it is possible to avoid experimental losses, and alterations to the quantitative variables and also to improve the automation of the process

From the point of view of characterizing the Van de Graaff, this research states that, following the proposed methodology, the act of measuring and quantifying the voltage produced by the generator was a success. It was possible to fully evaluate the generation capacity of the electrostatic mechanism, as well as verify an operating voltage for the method.

Finally, the method suggests that after 4 cycles of electrifying the plate, a significant percentage of MP can be removed from the soil. Still, it's necessary to improve the sealing of this experiment, since we obtained a significant amount of sample waste during the process. Furthermore, the two samples being completely identical in terms of mass suggests that the variation in removal between them is due to variables that were not controlled during the experiment, such as the voltage generated by the Van de Graaff, humidity, absolute temperature and pressure variations.

8 Final considerations

All in all, the project has succeeded in confirming the removal method as well as producing a conveyor belt to carry out this process. The application of the two methods together is planned to be carried out soon, however, fine adjustments need to be made first. In addition, the final project suggests to be extremely feasible and satisfied the interests proposed within the research so far.

The author of this project will continue to develop and improve it in order to develop this method further. In addition, the application of the densimetric method is something that will be pursued in the future for the removal of particles that, on occasion, have not been removed by the induction of the electric field.

Finally, it is in the research's immediate interest to increase the sample size used in the method's confirmation processes, which was relatively low due to the project's development time of less than 6 months. The next step is therefore to increase this value.

Bibliography

AMARAL-ZETTLER, L. A.; ZETTLER, E. R.; MINCER, T. J. Ecology of the plastisphere. *Nature Reviews Microbiology*, Nature Publishing Group UK London, v. 18, n. 3, p. 139–151, 2020. Citado na página 4.

BABICH, L.; TAT'YANA, V. L. Generalized paschen's law for overvoltage conditions. *IEEE Transactions on Plasma Science*, IEEE, v. 44, n. 12, p. 3243–3248, 2016. Citado na página 13.

BOYLE, W.; KISLIUK, P. Departure from paschen's law of breakdown in gases. *Physical Review*, APS, v. 97, n. 2, p. 255, 1955. Citado na página 13.

CVERENKÁROVÁ, K.; VALACHOVIČOVÁ, M.; MACKUL'AK, T.; ŽEMLIČKA, L.; BÍROŠOVÁ, L. Microplastics in the food chain. *Life*, MDPI, v. 11, n. 12, p. 1349, 2021. Citado na página 5.

ENDERS, K.; TAGG, A. S.; LABRENZ, M. Evaluation of electrostatic separation of microplastics from mineral-rich environmental samples. *Frontiers in Environmental Science*, Frontiers, p. 112, 2020. Citado na página 8.

FELSING, S.; KOCHLEUS, C.; BUCHINGER, S.; BRENNHOLT, N.; STOCK, F.; REIFFERSCHEID, G. A new approach in separating microplastics from environmental samples based on their electrostatic behavior. *Environmental Pollution*, Elsevier, v. 234, p. 20–28, 2018. Citado 5 vezes nas páginas 7, 8, 9, 12, and 19.

FRIAS, J. P.; NASH, R. Microplastics: Finding a consensus on the definition. *Marine pollution bulletin*, Elsevier, v. 138, p. 145–147, 2019. Citado na página 4.

FURFARI, F. A. A history of the van de graaff generator. *IEEE Industry Applications Magazine*, IEEE, v. 11, n. 1, p. 10–14, 2005. Citado na página 9.

GUO, J.-J.; HUANG, X.-P.; XIANG, L.; WANG, Y.-Z.; LI, Y.-W.; LI, H.; CAI, Q.-Y.; MO, C.-H.; WONG, M.-H. Source, migration and toxicology of microplastics in soil. *Environment international*, Elsevier, v. 137, p. 105263, 2020. Citado na página 4.

HASHMI, M. S. J. *Comprehensive materials finishing*. [S.l.]: Elsevier, 2016. Citado na página 20.

HUSAIN, E.; NEMA, R. Analysis of paschen curves for air, n2 and sf6 using the townsend breakdown equation. *IEEE transactions on electrical insulation*, IEEE, n. 4, p. 350–353, 1982. Citado 2 vezes nas páginas 13 and 14.

LUNGU, M. Electrical separation of plastic materials using the triboelectric effect. *Minerals Engineering*, Elsevier, v. 17, n. 1, p. 69–75, 2004. Citado na página 7.

MACHADO, A. A. de S.; KLOAS, W.; ZARFL, C.; HEMPEL, S.; RILLIG, M. C. Microplastics as an emerging threat to terrestrial ecosystems. *Global change biology*, Wiley Online Library, v. 24, n. 4, p. 1405–1416, 2018. Citado na página 4.

MARTINS, A.; PINTO, H. van de graaff generator. *University of Minho*, 2009. Citado 2 vezes nas páginas 9 and 10.

MEEK, J. A theory of spark discharge. *Physical review*, APS, v. 57, n. 8, p. 722, 1940. Citado na página 13.

MERKULOVA, A.; CHERUNOVA, I.; DANILENKO, I. Investigation of electrostatic fields by modeling methods. In: EDP SCIENCES. *MATEC Web of Conferences*. [S.l.], 2017. v. 132, p. 04022. Citado na página 6.

RENNIE, J. L. R. *A Dictionary of Physics*. [S.l.]: Oxford University Press, 2019. Citado 2 vezes nas páginas 6 and 7.

ROCHE, J. Introducing electric fields. *Physics Education*, IOP Publishing, v. 51, n. 5, p. 055005, 2016. Citado na página 6.

TIAN, L.; JINJIN, C.; JI, R.; MA, Y.; YU, X. Microplastics in agricultural soils: sources, effects, and their fate. *Current Opinion in Environmental Science & Health*, Elsevier, v. 25, p. 100311, 2022. Citado na página 5.

TOWNSEND, J.; BAILEY, V. Xcvii. the motion of electrons in gases. *The London, Edinburgh, and Dublin Philosophical Magazine and Journal of Science*, Taylor & Francis, v. 42, n. 252, p. 873–891, 1921. Citado na página 13.

YANG, X.; MAN, Y. B.; WONG, M. H.; OWEN, R. B.; CHOW, K. L. Environmental health impacts of microplastics exposure on structural organization levels in the human body. *Science of the Total Environment*, Elsevier, v. 825, p. 154025, 2022. Citado na página 5.

ZHANG, Y.; WANG, S.; OLGA, V.; XUE, Y.; LV, S.; DIAO, X.; ZHANG, Y.; HAN, Q.; ZHOU, H. The potential effects of microplastic pollution on human digestive tract cells. *Chemosphere*, Elsevier, v. 291, p. 132714, 2022. Citado na página 5.

ZHOU, J.; WEN, Y.; MARSHALL, M. R.; ZHAO, J.; GUI, H.; YANG, Y.; ZENG, Z.; JONES, D. L.; ZANG, H. Microplastics as an emerging threat to plant and soil health in agroecosystems. *Science of the Total Environment*, Elsevier, v. 787, p. 147444, 2021. Citado na página 5.

【評語】200015

This project designed, developed and tested a vibrating conveyor belt that would act in conjunction with a plate electrified by a Van de Graaff generator to separate the plastic compound using electric field induction. It was found that the removal of microplastics ranged it from 10 to 20% efficiency, suggesting it as an effective method for separating microplastics.It is suggestd that the authors can review and evaluate current commercial technologies and equipments and focus on enhancing the separation efficiency.